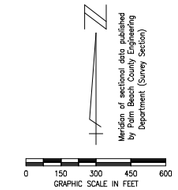

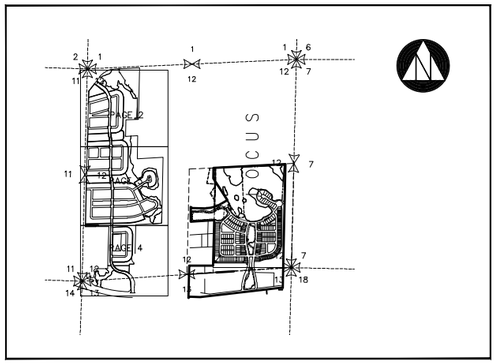

NPBCID EASEMENTS

No.	TYPE	RECORDING DATA	INST. DATE	RECORDING DATE	REMARKS
E 1	IEE	PB 99/47-62	N/A	06/26/03	TRACT R-1
E 2		PB 99/47-62	N/A	06/26/03	OPEN SPACE 8
E 3		PB 99/47-62	N/A	06/26/03	OPEN SPACE 9
E 4		PB 99/47-62	N/A	06/26/03	LAKE TRACT 7
E 5		PB 99/47-62	N/A	06/26/03	LAKE TRACT 8
E 6		PB 99/47-62	N/A	06/26/03	OPEN SPACE 21
E 7		PB 99/47-62	N/A	06/26/03	WETLAND 4
E 8		PB 99/47-62	N/A	06/26/03	UPLAND 11
E 9		PB 99/47-62	N/A	06/26/03	UPLAND 10
E 10		PB 99/47-62	N/A	06/26/03	WETLAND 3
E 11		PB 99/47-62	N/A	06/26/03	UPLAND 9
E 12		PB 99/47-62	N/A	06/26/03	LAKE TRACT 3
E 13		PB 99/47-62	N/A	06/26/03	OPEN SPACE 22
E 14		PB 99/47-62	N/A	06/26/03	UPLAND 6
E 15		PB 99/47-62	N/A	06/26/03	LAKE TRACT 2
E 16		PB 99/47-62	N/A	06/26/03	WETLAND 1
E 17		PB 99/47-62	N/A	06/26/03	UPLAND 2
E 18		PB 99/47-62	N/A	06/26/03	OPEN SPACE 19
E 19		PB 99/47-62	N/A	06/26/03	UPLAND 4
E 20		PB 99/47-62	N/A	06/26/03	UPLAND 5
E 21		PB 99/47-62	N/A	06/26/03	UPLAND 3
E 22		PB 99/47-62	N/A	06/26/03	WETLAND 2
E 23		PB 99/47-62	N/A	06/26/03	UPLAND 8
E 24		PB 99/47-62	N/A	06/26/03	UPLAND 7
E 25		PB 99/47-62	N/A	06/26/03	LAKE TRACT 4
E 26		PB 99/47-62	N/A	06/26/03	OPEN SPACE 10
E 27		PB 99/47-62	N/A	06/26/03	LAKE TRACT 5
E 28		PB 99/47-62	N/A	06/26/03	OPEN SPACE 11
E 29		PB 99/47-62	N/A	06/26/03	UPLAND 1
E 30		PB 99/47-62	N/A	06/26/03	LAKE TRACT 6

NPBCID OWNED TRACTS

No.	RECORDING DATA	INST. DATE	RECORDING DATE	REMARKS
T 1	PB 99/47-62	N/A	06/26/03	TRACT R-2
T 2	PB 99/47-62	N/A	06/26/03	TRACT R-3
T 3	PB 99/47-62	N/A	06/26/03	TRACT R-4
T 4	PB 99/47-62	N/A	06/26/03	TRACT R-5
T 5	PB 99/47-62	N/A	06/26/03	TRACT R-6
T 6	PB 99/47-62	N/A	06/26/03	TRACT R-7
T 7	PB 99/47-62	N/A	06/26/03	TRACT R-8

NPBCID FACILITIES

No.	REMARKS
WQ-1	WATER QUALITY SAMPLING STATION

RECORDED PLATS

No.	PLAT BOOK/PAGES	TITLE
1	PB 99/ 47-62	PINES ON PENNOCK LANE P.U.D. PLAT NO. 2 (PASEOS)
2	PB 96/184-185	PINES ON PENNOCK LANE P.U.D. PLAT NO. 1

BLANKET EASEMENT RELEASE CHART

LOT NUMBER	BLANKET EASEMENT RELEASE RECORDING DATA

LEGEND:

WME	denotes Water Management Easement
WMME	denotes Water Management Maintenance
IEE	denotes Ingress-Egress Easement
GCAE	denotes Golf Course Access Easement
WMAE	denotes Water Management Access Easement
E	denotes Utility Easement
DE	denotes Drainage Easement
CE	denotes Conservation Easement
PE	denotes Preservation Easement
PT	denotes Wetland Preservation Tract
WPA	denotes Wetland Preservation Area WMT
MT	denotes Water Management Tract
LOA	denotes Land Owners Agreement
NPBCID	denotes Northern Palm Beach County Improvement District
NGVD	denotes National Geodetic Vertical Datum
IE	denotes Invert Elevation (NGVD)
CMP	denotes Corrugated Metal Pipe
RCP	denotes Reinforced Concrete Pipe
	denotes Recorded Plat Corner
	denotes Palm Beach County Section Corner
	denotes Palm Beach County Section Quarter Corner
	denotes NPBCID Unit Boundary
	denotes NPBCID Fee Simple Tract
	denotes NPBCID Easements
	denotes Palm Beach County Section Lines
IP-1	denotes Irrigation Pump
E-1	denotes District Easement
T-1	denotes District Owned Tract
F-1	denotes Flashboard Riser
W-1	denotes Weir
PS-1	denotes Pump Station
C-1	denotes Culvert
TE-1	denotes Telemetry Catwalk with Metritape
OS-2	denotes Operable Gate Structure
RW-1	denotes Recharge Well
MW-1	denotes Hazardous Material Monitoring Well
WQ-1	denotes Water Quality Sampling Station
SG-1	denotes Staff Gauge
RG-1	denotes Rainfall Gauge
	denotes Flow direction

No.	DATE	BY	REVISION
6	12-07-20	JAF	UPDATE FACILITIES MAP
5	11-20-13	JAF	REVISE BORDER
4	02-20-06	MCB	NPBCID FACILITIES UPDATE
3	02-17-05	JCD	NPBCID FACILITIES UPDATE
2	SEPT 04	CAR	DENOTED PINES OF PENNOCK LANE PLAT 1
1	MAR 04	JD	ADDED EASEMENTS AND TRACTS FOR PLAT 2

SHEET 1 OF 4

FIELD:	N/A
DRAWN:	SFRN STAFF
DESIGNED:	N/A
APPROVED:	C.A.R.
SCALE:	NOTED

NORTHERN PALM BEACH COUNTY IMPROVEMENT DISTRICT

NORTHERN PALM BEACH IMPROVEMENT DISTRICT
FACILITY MAP OF:
UNIT OF DEVELOPEMENT NO. 45
SECTIONS 12, 13 AND 14,
TOWNSHIP 41 SOUTH, RANGE 42 EAST,
PALM BEACH COUNTY, FLORIDA

DATE: 06-15-06

EXHIBIT 45 (1)

INFORMATION SHOWN HEREON DOES NOT CONSTITUTE, NOR DOES IT REPRESENT, A SURVEY OF THE SUBJECT PREMISES.

Date\Time : Mon, 07 Dec 2020 - 5:57pm Current Plotstyle : ByColor
Path\Name : c:\Users\jfitzgerald\Documents\James Files\WORK DWGS\WF039000 NPBCID\UNIT 45\Facilities Map\unit45fm01.dwg

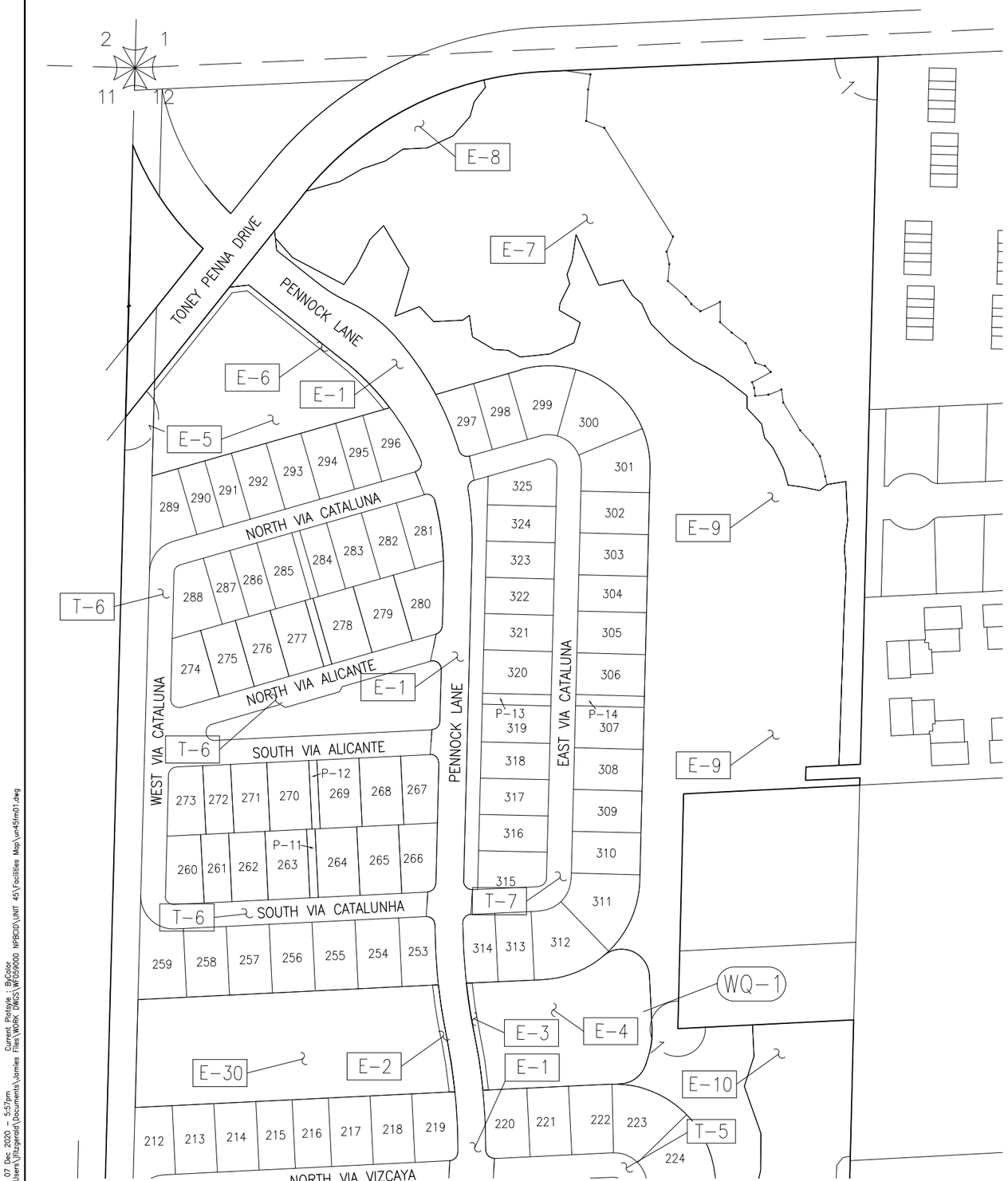

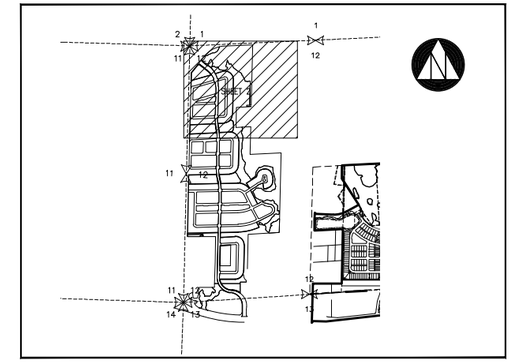

NPBCID EASEMENTS

No.	TYPE	RECORDING DATA	INST. DATE	RECORDING DATE	REMARKS
E 1	IEE	PB 99/47-62	N/A	06/26/03	TRACT R-1
E 2		PB 99/47-62	N/A	06/26/03	OPEN SPACE 8
E 3		PB 99/47-62	N/A	06/26/03	OPEN SPACE 9
E 4		PB 99/47-62	N/A	06/26/03	LAKE TRACT 7
E 5		PB 99/47-62	N/A	06/26/03	LAKE TRACT 8
E 6		PB 99/47-62	N/A	06/26/03	OPEN SPACE 21
E 7		PB 99/47-62	N/A	06/26/03	WETLAND 4
E 8		PB 99/47-62	N/A	06/26/03	UPLAND 11
E 9		PB 99/47-62	N/A	06/26/03	UPLAND 10
E 10		PB 99/47-62	N/A	06/26/03	WETLAND 3
E 30		PB 99/47-62	N/A	06/26/03	LAKE TRACT 6

NPBCID OWNED TRACTS

No.	RECORDING DATA	INST. DATE	RECORDING DATE	REMARKS
T 6	PB 99/47-62	N/A	06/26/03	TRACT R-7
T 7	PB 99/47-62	N/A	06/26/03	TRACT R-8

NPBCID FACILITIES

No.	REMARKS

RECORDED PLATS

No.	PLAT BOOK/PAGES	TITLE
1	PB 99/ 47-62	PINES ON PENNOCK LANE P.U.D. PLAT NO. 2 (PASEOS)

BLANKET EASEMENT RELEASE CHART

LOT NUMBER	BLANKET EASEMENT RELEASE RECORDING DATA

Meridian of sectional data published by Palm Beach County Engineering Department (Survey Section)

0 50 100 150 200
GRAPHIC SCALE IN FEET

LEGEND:

WME	denotes Water Management Easement
WMME	denotes Water Management Maintenance
IEE	denotes Ingress-Egress Easement
GCAE	denotes Golf Course Access Easement
WMAE	denotes Water Management Access Easement
E	denotes Utility Easement
DE	denotes Drainage Easement
CE	denotes Conservation Easement
PE	denotes Preservation Easement
PT	denotes Wetland Preservation Tract
WPA	denotes Wetland Preservation Area WMT
MT	denotes Water Management Tract
LOA	denotes Land Owners Agreement
NPBCID	denotes Northern Palm Beach County Improvement District
NGVD	denotes National Geodetic Vertical Datum
IE	denotes Invert Elevation (NGVD)
CMP	denotes Corrugated Metal Pipe
RCP	denotes Reinforced Concrete Pipe
	denotes Recorded Plat Corner
22 23 27 26	denotes Palm Beach County Section Corner
22 27 26 27	denotes Palm Beach County Section Quarter Corner
	denotes NPBCID Unit Boundary
	denotes NPBCID Fee Simple Tract
	denotes NPBCID Easements
	denotes Palm Beach County Section Lines
IP-1	denotes Irrigation Pump
E-1	denotes District Easement
T-1	denotes District Owned Tract
F-1	denotes Flashboard Riser
W-1	denotes Weir
PS-1	denotes Pump Station
C-1	denotes Culvert
TE-1	denotes Telemetry Catwalk with Metritape
OS-2	denotes Operable Gate Structure
RW-1	denotes Recharge Well
MW-1	denotes Hazardous Material Monitoring Well
WQ-1	denotes Water Quality Sampling Station
SG-1	denotes Staff Gauge
RG-1	denotes Rainfall Gauge
	denotes Flow direction

No.	DATE	BY	REVISION
6	12-07-20	JAF	UPDATE FACILITIES MAP
5	11-20-13	JAF	REVISE BORDER
4	02-20-06	MCB	NPBCID FACILITIES UPDATE
3	02-17-05	JCD	NPBCID FACILITIES UPDATE
1	MAR. 04	JD	ADDED EASEMENTS AND TRACTS FOR PLAT 2

SHEET 2 OF 4

INFORMATION SHOWN HEREON DOES NOT CONSTITUTE, NOR DOES IT REPRESENT, A SURVEY OF THE SUBJECT PREMISES.

FIELD: N/A
DRAWN: SFRN STAFF
DESIGNED: N/A
APPROVED: C.A.R.
SCALE: NOTED

NORTHERN PALM BEACH COUNTY IMPROVEMENT DISTRICT

NORTHERN PALM BEACH COUNTY IMPROVEMENT DISTRICT
FACILITIES MAP UNIT OF DEVELOPMENT NO. 45
IN SECTIONS SECTIONS 12, 13 AND 14, T. 41 S., R. 42 E., PALM BEACH COUNTY, FLORIDA

DATE: 06-15-06

EXHIBIT 45 (2)

Date\Time : Mon, 07 Dec 2020 - 5:57pm Current Plotstyle : ByColor
Path\Name : C:\Users\jfitzgerald\Documents\Jamies Files\WORK DWGS\WP259000 NPBCID\UNIT 45\Facilities Map\unt45fm01.dwg

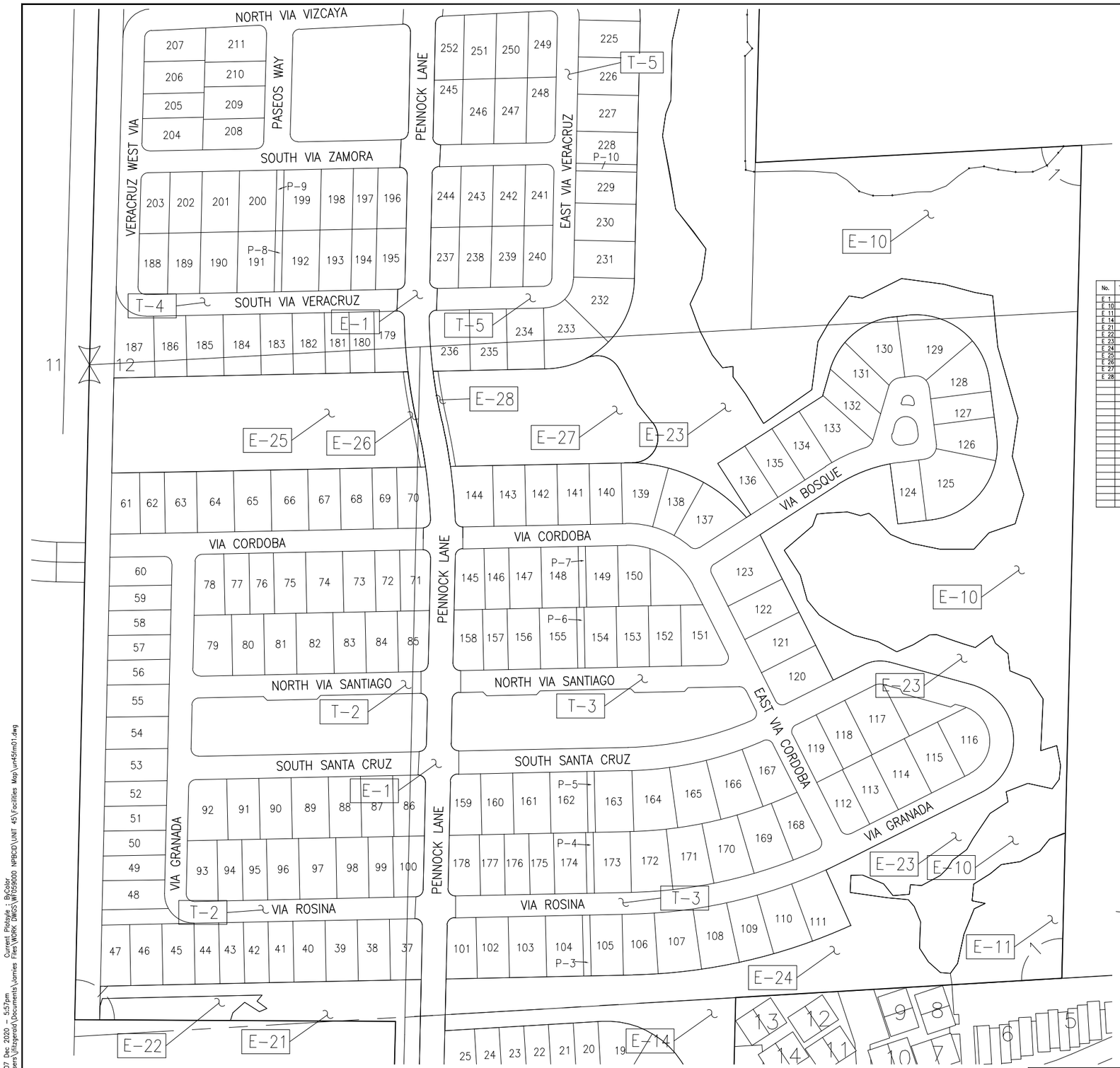

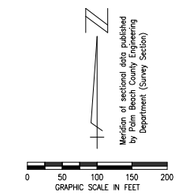

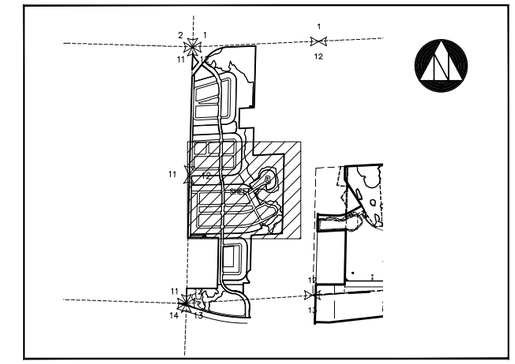

NPBCID EASEMENTS

No.	TYPE	RECORDING DATA	INST. DATE	RECORDING DATE	REMARKS
E 1	IEE	PB 99/47-62	N/A	06/26/03	TRACT R-1
E 10		PB 99/47-62	N/A	06/26/03	WETLAND 3
E 11		PB 99/47-62	N/A	06/26/03	UPLAND 9
E 14		PB 99/47-62	N/A	06/26/03	UPLAND 6
E 21		PB 99/47-62	N/A	06/26/03	UPLAND 3
E 22		PB 99/47-62	N/A	06/26/03	WETLAND 2
E 23		PB 99/47-62	N/A	06/26/03	UPLAND 8
E 24		PB 99/47-62	N/A	06/26/03	UPLAND 7
E 25		PB 99/47-62	N/A	06/26/03	LAKE TRACT 4
E 26		PB 99/47-62	N/A	06/26/03	OPEN SPACE 10
E 27		PB 99/47-62	N/A	06/26/03	LAKE TRACT 5
E 28		PB 99/47-62	N/A	06/26/03	OPEN SPACE 11

NPBCID OWNED TRACTS

No.	RECORDING DATA	INST. DATE	RECORDING DATE	REMARKS
T 2	PB 99/47-62	N/A	06/26/03	TRACT R-3
T 3	PB 99/47-62	N/A	06/26/03	TRACT R-4
T 4	PB 99/47-62	N/A	06/26/03	TRACT R-5
T 5	PB 99/47-62	N/A	06/26/03	TRACT R-6

NPBCID FACILITIES

No.	REMARKS

RECORDED PLATS

No.	PLAT BOOK/PAGES	TITLE
1	PB 99/ 47-62	PINES ON PENNOCK LANE P.U.D. PLAT NO. 2 (PASEOS)

BLANKET EASEMENT RELEASE CHART

LOT NUMBER	BLANKET EASEMENT RELEASE RECORDING DATA

LEGEND:

WME	denotes Water Management Easement
WMME	denotes Water Management Maintenance
IEE	denotes Ingress-Egress Easement
GCAE	denotes Golf Course Access Easement
WMAE	denotes Water Management Access Easement
E	denotes Utility Easement
DE	denotes Drainage Easement
CE	denotes Conservation Easement
PE	denotes Preservation Easement
PT	denotes Wetland Preservation Tract
WPA	denotes Wetland Preservation Area WMT
MT	denotes Water Management Tract
LOA	denotes Land Owners Agreement
NPBCID	denotes Northern Palm Beach County Improvement District
NGVD	denotes National Geodetic Vertical Datum
IE	denotes Invert Elevation (NGVD)
CMP	denotes Corrugated Metal Pipe
RCP	denotes Reinforced Concrete Pipe
	denotes Recorded Plat Corner
22 23 27 26	denotes Palm Beach County Section Corner
22 27 27 26	denotes Palm Beach County Section Quarter Corner
	denotes NPBCID Unit Boundary
	denotes NPBCID Fee Simple Tract
	denotes NPBCID Easements
	denotes Palm Beach County Section Lines
IP-1	denotes Irrigation Pump
E-1	denotes District Easement
T-1	denotes District Owned Tract
F-1	denotes Flashboard Riser
W-1	denotes Weir
PS-1	denotes Pump Station
C-1	denotes Culvert
TE-1	denotes Telemetry Catwalk with Metritape
OS-2	denotes Operable Gate Structure
RW-1	denotes Recharge Well
MW-1	denotes Hazardous Material Monitoring Well
WQ-1	denotes Water Quality Sampling Station
SG-1	denotes Staff Gauge
RG-1	denotes Rainfall Gauge
	denotes Flow direction

No.	DATE	BY	REVISION
6	12-07-20	JAF	UPDATE FACILITIES MAP
5	11-20-13	JAF	REVISE BORDER
4	02-20-06	MCB	NPBCID FACILITIES UPDATE
3	02-17-05	JCD	NPBCID FACILITIES UPDATE
1	MAR 04	JD	ADDED EASEMENTS AND TRACTS FOR PLAT 2

SHEET 3 OF 4

INFORMATION SHOWN HEREON DOES NOT CONSTITUTE, NOR DOES IT REPRESENT, A SURVEY OF THE SUBJECT PREMISES.

FIELD:	N/A
DRAWN:	SFRN STAFF
DESIGNED:	N/A
APPROVED:	C.A.R.
SCALE:	NOTED

NORTHERN PALM BEACH COUNTY IMPROVEMENT DISTRICT

NORTHERN PALM BEACH COUNTY IMPROVEMENT DISTRICT
FACILITIES MAP UNIT OF DEVELOPMENT NO. 45
IN SECTIONS SECTIONS 12, 13 AND 14, T. 41 S., R. 42 E., PALM BEACH COUNTY, FLORIDA

DATE: 06-15-06

EXHIBIT 45(3)

Date\Time : Mon, 07 Dec 2020 - 5:57pm Current Plotstyle : ByColor
Path\Name : C:\Users\jfitzgerald\Documents\James Files\WORK DWGS\WF059000 NPBCID\UNIT 45\Facilities Map\um45fm01.dwg

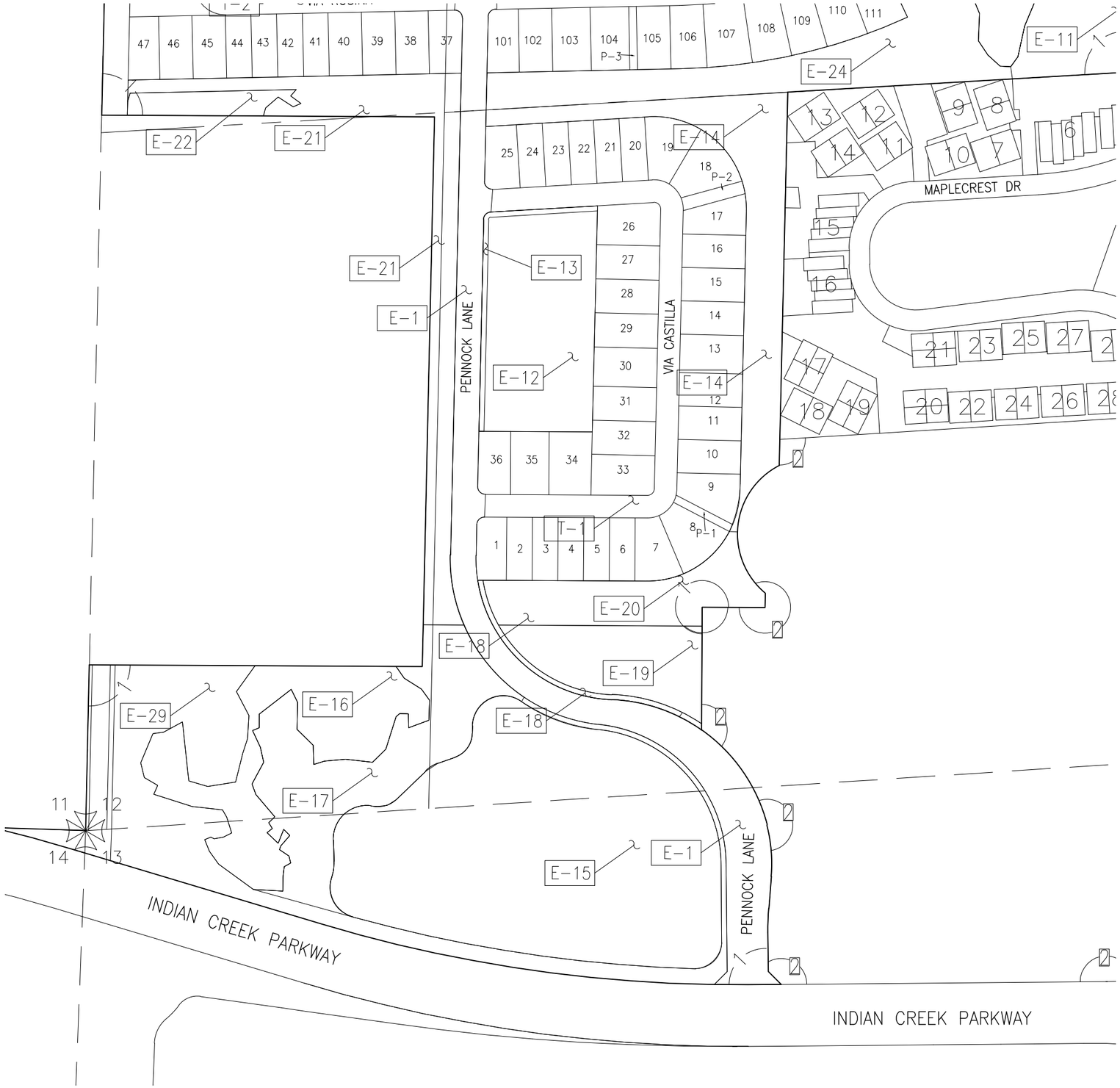

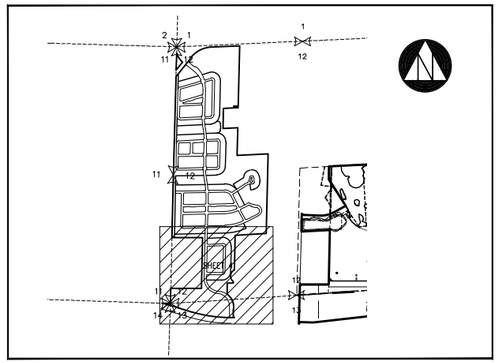

Meridian of sectional data published by Palm Beach County Engineering Department (Survey Section)

0 50 100 150 200
GRAPHIC SCALE IN FEET

NPBCID EASEMENTS

No.	TYPE	RECORDING DATA	INST. DATE	RECORDING DATE	REMARKS
E 1	IEE	PB 99/47-62	N/A	06/26/03	TRACT R-1
E 11		PB 99/47-62	N/A	06/26/03	UPLAND 9
E 12		PB 99/47-62	N/A	06/26/03	LAKE TRACT 3
E 13		PB 99/47-62	N/A	06/26/03	OPEN SPACE 22
E 14		PB 99/47-62	N/A	06/26/03	UPLAND 6
E 15		PB 99/47-62	N/A	06/26/03	LAKE TRACT 2
E 16		PB 99/47-62	N/A	06/26/03	WETLAND 1
E 17		PB 99/47-62	N/A	06/26/03	UPLAND 2
E 18		PB 99/47-62	N/A	06/26/03	OPEN SPACE 19
E 19		PB 99/47-62	N/A	06/26/03	UPLAND 4
E 20		PB 99/47-62	N/A	06/26/03	UPLAND 5
E 21		PB 99/47-62	N/A	06/26/03	UPLAND 3
E 22		PB 99/47-62	N/A	06/26/03	WETLAND 2
E 23		PB 99/47-62	N/A	06/26/03	UPLAND 8
E 24		PB 99/47-62	N/A	06/26/03	UPLAND 7
E 29		PB 99/47-62	N/A	06/26/03	UPLAND 1

NPBCID OWNED TRACTS

No.	RECORDING DATA	INST. DATE	RECORDING DATE	REMARKS
T 1	PB 99/47-62	N/A	06/26/03	TRACT R-2
T 2	PB 99/47-62	N/A	06/26/03	TRACT R-3
T 3	PB 99/47-62	N/A	06/26/03	TRACT R-4

NPBCID FACILITIES

No.	REMARKS

RECORDED PLATS

No.	PLAT BOOK/PAGES	TITLE
1	PB 99/ 47-62	PINES ON PENNOCK LANE P.U.D. PLAT NO. 2 (PASEOS)

BLANKET EASEMENT RELEASE CHART

LOT NUMBER	BLANKET EASEMENT RELEASE RECORDING DATA

LEGEND:

WME	denotes Water Management Easement
WMME	denotes Water Management Maintenance
IEE	denotes Ingress-Egress Easement
GCAE	denotes Golf Course Access Easement
WMAE	denotes Water Management Access Easement
E	denotes Utility Easement
DE	denotes Drainage Easement
CE	denotes Conservation Easement
PE	denotes Preservation Easement
PT	denotes Wetland Preservation Tract
WPA	denotes Wetland Preservation Area WMT
MT	denotes Water Management Tract
LOA	denotes Land Owners Agreement
NPBCID	denotes Northern Palm Beach County Improvement District
NGVD	denotes National Geodetic Vertical Datum
IE	denotes Invert Elevation (NGVD)
CMP	denotes Corrugated Metal Pipe
RCP	denotes Reinforced Concrete Pipe
	denotes Recorded Plat Corner
	denotes Palm Beach County Section Corner
	denotes Palm Beach County Section Quarter Corner
	denotes NPBCID Unit Boundary
	denotes NPBCID Fee Simple Tract
	denotes NPBCID Easements
	denotes Palm Beach County Section Lines
IP-1	denotes Irrigation Pump
E-1	denotes District Easement
T-1	denotes District Owned Tract
F-1	denotes Flashboard Riser
W-1	denotes Weir
PS-1	denotes Pump Station
C-1	denotes Culvert
TE-1	denotes Telemetry Catwalk with Metritape
OS-2	denotes Operable Gate Structure
RW-1	denotes Recharge Well
MW-1	denotes Hazardous Material Monitoring Well
WQ-1	denotes Water Quality Sampling Station
SG-1	denotes Staff Gauge
RG-	denotes Rainfall Gauge
	denotes Flow direction

No.	DATE	BY	REVISION
6	12-07-20	JAF	UPDATE FACILITIES MAP
5	11-20-13	JAF	REVISE BORDER
4	02-20-06	MCB	NPBCID FACILITIES UPDATE
3	02-17-05	JCD	NPBCID FACILITIES UPDATE
1	MAR 04	JD	ADDED EASEMENTS AND TRACTS FOR PLAT 2

SHEET 4 OF 4

INFORMATION SHOWN HEREON DOES NOT CONSTITUTE, NOR DOES IT REPRESENT, A SURVEY OF THE SUBJECT PREMISES.

FIELD: N/A
DRAWN: SFRN STAFF
DESIGNED: N/A
APPROVED: C.A.R.
SCALE: NOTED

NORTHERN PALM BEACH COUNTY IMPROVEMENT DISTRICT

NORTHERN PALM BEACH COUNTY IMPROVEMENT DISTRICT
FACILITIES MAP UNIT OF DEVELOPMENT NO. 45
IN SECTIONS SECTIONS 12, 13 AND 14, T. 41 S., R. 42 E., PALM BEACH COUNTY, FLORIDA

DATE: 06-15-06

EXHIBIT 45(4)

Date\Time : Mon, 07 Dec 2020 - 5:57pm Current Plotstyle : ByColor
Path\Name : C:\Users\jfitzgerald\Documents\Jamies Files\WORK DWGS\WF259000 NPBCID\UNIT 45\Facilities Map\un45fm01.dwg